UFH SERIES

Horizontal
Ultra Flow Filter Housing
ASME Design/Industrial Design

- Water
- Desalination
- Chemicals
- Electronics
- Oil/Gas
- Air/Gas
- Inks/Paints/ Coatings
- Power
- Coolants
- Pulp & Paper

UFH SERIES

Ultra Flow Cartridge Filter Housings Horizontal

- Multi-purpose industrial ASME "U" & "UM" code and non-code housings.
- Accepts multiple 20”, 40” & 60” cartridges.
- 150psig (10.3bar) @ 250°F(121.1°C) design pressure.
- Vessels available in carbon or stainless steel 304 or 316.
- Also available in LDX2101, C276, AL6XN, RA2205 & Monel 400.
- Swing bolt closure allows for quick element change out.
- Vessels will accept industry standard elements from:
    - ChemFlo
    - Pall
    - Graver
    - FTC
    - Parker

For pricing or to order, please contact

FILTERSOURCE
LIQUID | AIR | HYDRAULIC | GAS

204 North Link Lane #7
Fort Collins, CO 80524
Office 970-204-4758
Fax 970-204-4764
brandon@industrialfiltersource.com

UFH SERIES

Horizontal
Ultra Flow Filter Housing
ASME Design/Industrial Design

HOUSING SPECIFICATIONS

Inlet/Outlet
3"Flange -22"Flange

Dirty Drain
2"NPT

Clean Drain
2"NPT

Vent
1/2"NPT

Gauges
1/2" NPT

Certifications
U
UM
CE
NB
CRN

MODEL FLOW RATES

MODEL	# OF FILTERS	FLOW RATE-GPM 40" LG	FLOW RATE-GPM 60" LG	MAX INLET/OUTLET (IN)
UFH14	2	350	500	4"
UFH16	3	525	750	6"
UFH18	4	700	1000	6"
UFH20	5	875	1250	8"
UFH22	7	1225	1750	10"
UFH24	8	1400	2000	10"
UFH26	9	1575	2250	12"
UFH28	11	1925	2750	12"
UFH30	13	2275	3250	12"
UFH32	15	2625	3750	14"
UFH34	17	2975	4250	14"
UFH36	19	3325	4750	16"
UFH38	21	3675	5250	16"
UFH40	24	4200	6250	16"
UFH42	26	4550	6500	18"
UFH44	29	5075	7250	18"
UFH46	32	5600	8000	20"
UFH48	34	5950	8500	22"
UFH50	38	6650	9500	22"

For maximum efficiency/product life, the flow rates are based on water at 250gpm/60". Actual Flow rate is dependent on fluid viscosity, cartridge micron rating, contaminant and type of media.

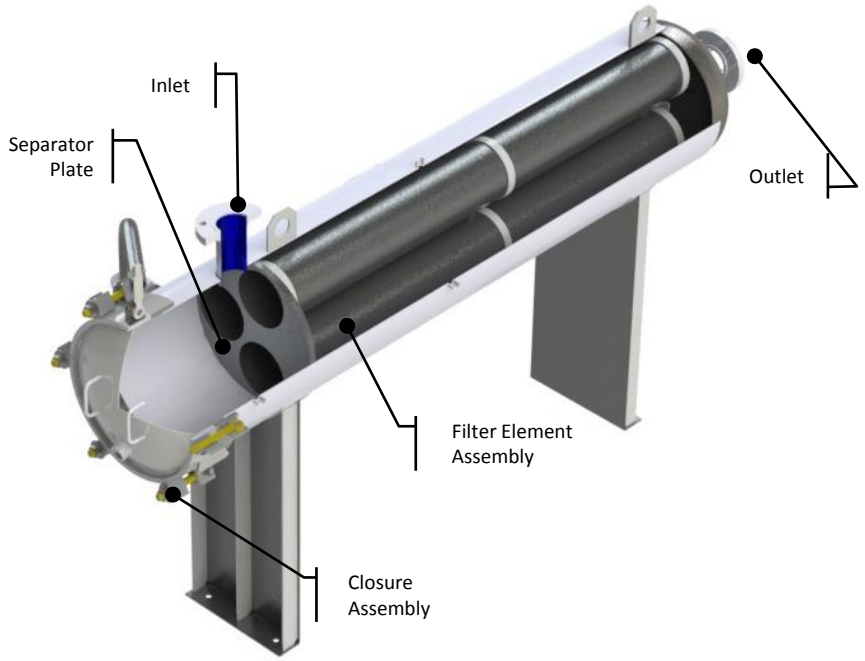

MATERIAL OF CONSTRUCTION	MAX. OPERATING PRESSURE (PSI @250°F)	MAX. DESIGN TEMP
CARBON STEEL	150 psi (10.3bar)	300°F (150°C)
304 STAINLESS STEEL	150 psi (10.3bar)	300°F (150°C)
316 STAINLESS STEEL	150 psi (10.3bar)	300°F (150°C)

For pricing or to order, please contact

FILTERSOURCE
LIQUID | AIR | HYDRAULIC | GAS

204 North Link Lane #7
Fort Collins, CO 80524
Office 970-204-4758
Fax 970-204-4764
brandon@industrialfiltersource.com

UFH SERIES

Horizontal
Ultra Flow Filter Housing
ASME Design/Industrial Design

MODEL DIMENSIONAL DETAILS

MODEL	SHIPPING WEIGHT (LBS)	A	B	C	D	E
UFH14	365	14 1/8"	12"	36"	48"	60"
UFH16	425	16 1/8"	14"	36"	50"	62"
UFH18	500	18 1/8"	15"	36"	51"	62"
UFH20	600	20 1/8"	16"	36"	52"	64"
UFH22	900	22 1/8"	16"	36"	52"	66"
UFH24	975	24 1/8"	17"	36"	53"	66"
UFH26	1100	26 1/8"	18"	36"	54"	70"
UFH28	1400	28 1/8"	20"	36"	56"	72"
UFH30	1600	30 1/8"	21"	36"	57"	72"
UFH32	1750	32 1/8"	22"	36"	58"	75"
UFH34	1850	34 1/8"	22"	36"	58"	75"
UFH36	2100	36 1/8"	24"	36"	60"	77"
UFH38	2450	38 1/8"	26"	36"	62"	77"
UFH40	2700	40 1/8"	27"	36"	63"	80"
UFH42	2900	42 1/8"	29"	36"	65"	80"
UFH44	3300	44 1/8"	29"	36"	65"	84"
UFH46	3700	46 1/8"	29"	36"	65"	84"
UFH48	4100	48 1/8"	29"	36"	65"	88"
UFH50	4500	50 1/8"	32"	36"	68"	88"

*Above dimensions are for 40" Element, Style C. For other options contact factory. **For 20 & 60in element dimensions, refer to the chart below. ***Given dimensions are approximate only, for true dimensions contact factory.

REFERENCE CHART LEGEND	
A	OUTSIDE DIAMETER
B	FACE TO CENTER
C	FLOOR TO OUTLET
D	FLOOR TO INLET
E	OVERALL LENGTH

STYLE E

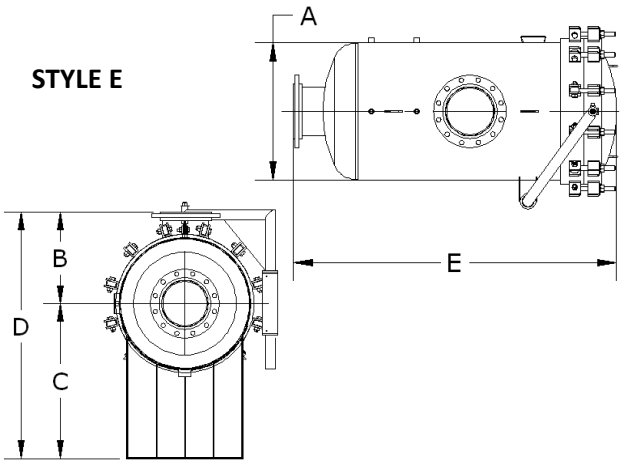

PRODUCT NOMENCLATURE

S6	UFH	16	3	60	6F	A	-	-
MATERIAL	MODEL	HOUSING DIAMETER	# OF CARTRIDGES	LENGTH	CONNECTION TYPE	CONFIGURATION	FILTER CONFIG	O-RING
(-) CARBON	UFH ASME CODE	SEE TABLE	SEE TABLE	20	SEE TABLE	E (STD) TOP ENTRY/BACK OUT	SEE SIDE PANEL FOR OPTIONS	
S4 SS304	EUFH NON ASME			40				
S6 SS316				60				

NOTE: The UFH series in an ASME code stamped housingThis vessel is also available in an industrial non-code design.
For non-code, add the prefix "E" to the UFH in the part number.

HOUSING OPTIONS

Configuration Options
E – Top Entry/Back Out (standard)

O-Ring Options
(-) – Buna-N (standard)
ED – EPDM
VI – Viton
SI – Silicone
TF – Teflon

Closure Assembly Options
(-) K1 – Head lift (standard)
K2 – Hinge
K3 – Hydraulic Jack Davit Side
K4 – Hydraulic Jack Davit Top

Accessories
Direct Reading Gauge
DP Gauge
Safety Relief Valves
Vent Valves
Drain Valves
Air Eliminator

Other Options
Stainless Steel bolting
Passivation
Electropolished, Inside/Out
Skid Mounting
Duplexing

For pricing or to order, please contact

FILTERSOURCE
LIQUID | AIR | HYDRAULIC | GAS

204 North Link Lane #7
Fort Collins, CO 80524
Office 970-204-4758
Fax 970-204-4764
brandon@industrialfiltersource.com

UFH SERIES

Horizontal
Ultra Flow Filter Housing
ASME Design/Industrial Design

FLOW CHART

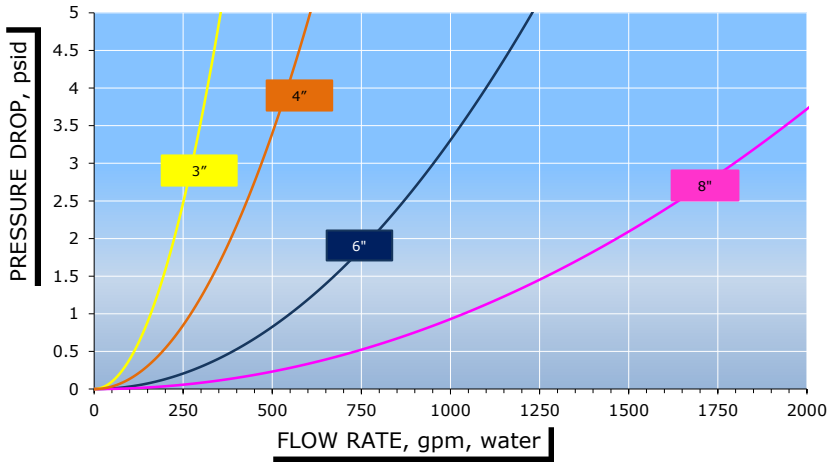

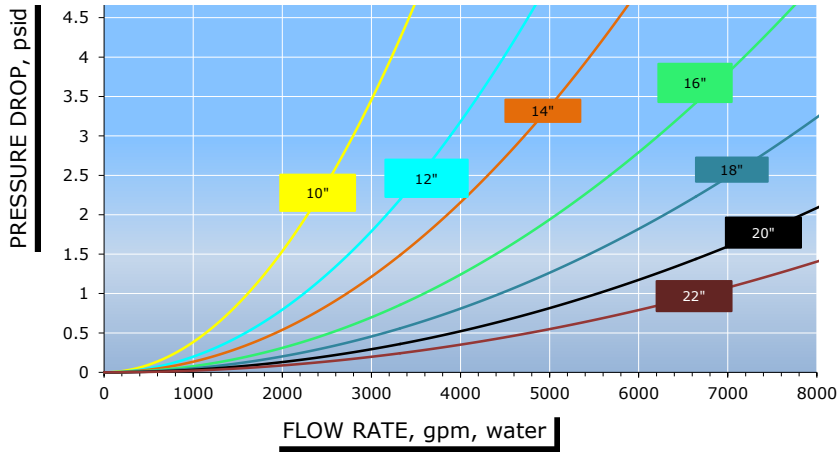

For pricing or to order, please contact

FILTERSOURCE
LIQUID | AIR | HYDRAULIC | GAS

204 North Link Lane #7
Fort Collins, CO 80524
Office 970-204-4758
Fax 970-204-4764
brandon@industrialfiltersource.com